ZEALLGRATE

MOLDED GRATING & PRODUCTS

High Performance Composite Solutions

Nantong ZeAll New Materials Co., Ltd.
www.izeall.com | +86-513-6681-9918 | sales@izeall.com
No.888 Changtai Road, Nantong, Jiangsu, China 226000

1. Company & Product Overview

Nantong ZeAll New Materials Co., Ltd. manufactures ZeAllgrate® molded fiberglass reinforced plastic (FRP) grating and products. Our product systems are engineered for corrosion resistance, strength, long life and worker safety in the most demanding industrial, marine and architectural environments. With more than ten custom resin systems, ZeAllgrate products deliver years of reliable service even in the most corrosive conditions, which cause conventional metallic and wood products to deteriorate rapidly.

ZeAllgrate molded product line includes ZeAllgrate® molded grating for most applications, molded high load capacity (HLC) grating for H-20 and forklift traffic, and specialty molded products for access flooring, docks and marinas, screening and architectural use.

Markets Served

Architectural, Bridge & Highway, Chemical, Commercial, Food & Beverage, Manufacturing, Metals & Mining, Microelectronics, Oil & Gas, Pharmaceutical, Power, Pulp & Paper, Recreation, Telecommunications, Transportation, Water & Wastewater

2. ZeAllgrate® Product Benefits

• High Strength to Weight Ratio

Less than one-half the weight of steel grating, allowing easy removal for access below floor level and installation with no heavy equipment and less manpower.

• Slip Resistant

The meniscus and integrally applied grit surfaces of ZeAllgrate molded products have unmatched slip resistance for improved worker safety.

• Electrically & Thermally Non-Conductive

Fiberglass is electrically non-conductive for safety and has low thermal conductivity, giving a more comfortable product on contact.

• Low Maintenance

The corrosion resistant properties of FRP reduce or eliminate sandblasting, scraping and painting; products clean easily with a high pressure washer.

• Impact Resistant

ZeAllgrate molded products show superior impact resistance compared with steel gratings.

• Fire Retardant

Most ZeAllgrate products are engineered to a flame spread rating of 25 or less, tested per ASTM E-84, meeting Class 1 fire rating.

• Corrosion Resistant

Isophthalic, vinyl ester and fire-retardant resin systems resist acids, alkalis, salts and solvents that destroy steel and wood.

3. Molded Grating Selection & Details

ZeAllgrate® molded grating is available in a wide range of mesh patterns, depths, panel sizes and resin systems to match your service requirement.

Brand	Depth	Mesh	Standard Panel Sizes	Wt. Per Sq. Ft.	Open Area
ZeAllgrate	1/2″	1-1/2″ x 1-1/2″ square	4′ x 8′ (non-load carrying)	0.8 lb	87%
ZeAllgrate	1/2″	2″ x 2″ square	4′ x 12′, 4′ x 15′ (fully supported)	1.0 lb	82%
ZeAllgrate	5/8″	1″ x 4″ rectangular	12′ x 4′	2.0 lb	58%
ZeAllgrate	3/4″	1″ x 4″ rectangular	10′ x 3′, 8′ x 4′	2.5 lb	69%
ZeAllgrate	3/4″	1-1/2″ x 1-1/2″ square	3′ x 10′, 4′ x 8′, 4′ x 12′	2.0 lb	70%
ZeAllgrate	1″	1-1/2″ x 1-1/2″ square	4′ x 8′, 4′ x 12′	2.5 lb	70%
ZeAllgrate	1-1/2″	1-1/2″ x 1-1/2″ square	4′ x 8′, 4′ x 12′	3.2 lb	70%
ZeAllgrate	1″	1″ x 2″ rectangular	8′ x 3′, 12′ x 4′	3.2 lb	48%
ZeAllgrate HLC	1-1/2″	1″ x 2″ rectangular	6′ x 4′, 4′ x 8′	6.2 lb	48%
ZeAllgrate HLC	2″	1″ x 2″ rectangular	6′ x 4′, 4′ x 8′	8.4 lb	48%

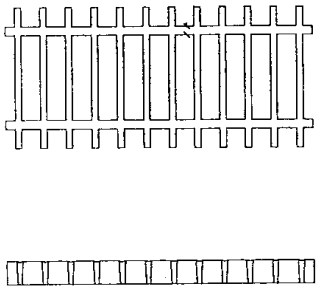

Molded grating - rectangular mesh, plan view

4. Molded Grating Details

Section properties and mesh details for standard ZeAllgrate® molded grating configurations (per foot of width).

Configuration	Section Properties	Bars/Ft	Open Area	Weight
5/8″ x 1″x4″ rectangular	A=2.11 in2, I=0.07 in4, S=0.22 in3	8	58%	2.0 psf
1″ x 1-1/2″ square	A=2.57 in2, I=0.22 in4, S=0.43 in3	8	70%	2.5 psf
1″ x 3/4″x4″ rectangular	A=2.34 in2, I=0.23 in4, S=0.37 in3	8	70%	2.6 psf
1″ x 1-1/2″ square (Design A)	A=1.71 in2, I=0.14 in4, S=0.29 in3	6	70%	2.0 psf
1-1/4″ x 1-1/2″ square	A=2.85 in2, I=0.51 in4, S=0.65 in3	8	70%	3.0 psf
1″ x 2″ square	A=2.16 in2, I=0.32 in4, S=0.48 in3	12	48%	3.2 psf
HLC 2″ x 1″x2″ rectangular	A=10.26 in2, I=3.4 in4, S=3.27 in3	12	48%	8.4 psf
HLC 2″ x 2″ square	A=7.45 in2, I=1.39 in4, S=1.80 in3	12	48%	8.4 psf

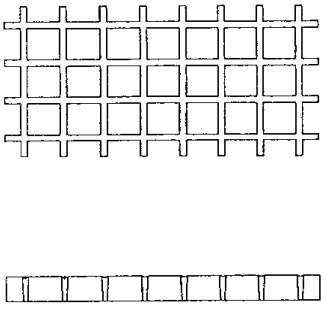

Molded grating panel - plan and elevation

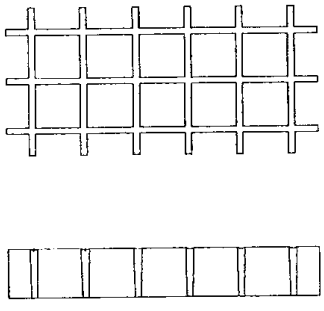

High load capacity (HLC) grating - 2″ deep

5. Materials & Resin Systems

Corrosion in the workplace negatively impacts your bottom line. Various applications present different requirements, so ZeAllgrate offers a range of standard resin systems matched to service environment, temperature and fire performance.

Resin System	Temp Rating	Key Properties	Typical Use
ZeAllgrate Vinyl Ester (VE)	180°F / 82°C	Superior corrosion resistance in caustic to acidic environments	Chemical plants, bleach areas, toughest environments
ZeAllgrate Isophthalic (ISO)	150°F / 65°C	Better corrosion resistance than ortho polyester	Wet/dry industrial floors
ZeAllgrate Food-Grade ISO	150°F / 65°C	Food-grade isophthalic with antimicrobial protection	Food & beverage, pharmaceutical
ZeAllgrate Ortho Polyester	140°F / 60°C	General purpose, economy	Dry areas, mild exposure
XFR Flame Retardant	180°F / 82°C	ASTM E-84 Class 1, rating 25 or less	Fire-rated areas, plenums
ELS Economy Line	140°F / 60°C	Economical corrosion resistant	Light industrial
HF Vinyl Ester (Hydrofluoric)	180°F / 82°C	Service in harsh hydrofluoric acid applications	HF acid service areas

6. Surfaces & Options

ZeAllgrate grating is available with a range of surface treatments to meet slip-resistance requirements from light pedestrian traffic to aggressive wet and oily process environments.

Surface	Description	Slip Resistance	Best For
Smooth	Flat bar top, easy clean	Standard	General platforms
Grit Top	Aluminum oxide grit embedded	High (R10-R12)	Wet, oily, process areas
Coarse Grit	Heavy grit, aggressive	Very high (R13)	Marine, offshore
Concave (Meniscus)	Recessed bar, chemical hold	Standard+	Chemical spills
Conductive Surface	NFPA 77 static dissipative, avg resistivity $2.5x10^3$ to 1x10■ ohm/ft	Special	Explosion / ESD areas

ZeAllgrate specialty molded products also include NSF® Standard 61-certified gratings for potable water contact, and a high-load HLC range with smooth or aluminum oxide grit surface for forklift and vehicular traffic. A minimum of four grounding attachments is recommended at the corners of each conductive-surface section.

7. Load Performance - Uniform Load Tables

All gratings tested per the ANSI Standard for FRP Composite Grating and Stair Treads. Maximum Recommended Load represents a 5:1 factor of safety on Ultimate Capacity. Values are deflection in inches at the given load.

CLEAR SPAN (in)	DEPTH (in)	MESH (in x in)	50	65	100	150	200	300	500	1000	2000	MAX RECOM. LOAD (psf)	ULTIMATE CAPACITY (psf)
12	5/8	1 x 4	0.01	0.02	0.03	0.04	0.05	0.08	--	--	--	1540	7720
12	3/4	1 x 4	<.01	<.01	0.01	0.01	0.02	0.02	0.04	0.08	0.15	1350	8130
12	3/4	1-1/2 x 1-1/2	<.01	<.01	0.01	0.02	0.02	0.04	0.06	0.12	--	1000	6000
12	1	3/4 x 3/4	<.01	<.01	<.01	<.01	0.01	0.02	0.03	0.06	0.12	1770	8880
12	1	3/4 x 4	<.01	<.01	<.01	<.01	<.01	0.01	0.02	0.04	0.08	2800	14040
12	1	1 x 4	<.01	<.01	<.01	<.01	<.01	0.01	0.02	0.05	0.09	2140	10700
12	1	1-1/2 x 1-1/2	<.01	<.01	<.01	<.01	<.01	0.02	0.04	0.08	0.16	1420	7120
12	1	2 x 2	<.01	0.01	0.02	0.03	0.04	0.06	--	--	--	1020	5140
12	1-1/4	1-1/2 x 1-1/2	<.01	<.01	<.01	<.01	<.01	0.01	0.02	0.04	--	1110	6660
12	1-1/2*	1-1/2 x 1-1/2	<.01	<.01	<.01	<.01	<.01	0.01	0.02	0.04	0.07	3200	16000
12	2	2 x 2	<.01	<.01	<.01	<.01	<.01	<.01	0.01	0.02	0.04	3840	19240
18	5/8	1 x 4	0.05	0.07	0.11	0.16	0.22	--	--	--	--	680	3410
18	3/4	1 x 4	0.02	0.02	0.04	0.06	0.08	0.11	0.19	--	--	600	3610
18	3/4	1-1/2 x 1-1/2	0.03	0.04	0.06	0.09	0.12	0.18	0.30	--	--	440	2660
18	1	3/4 x 3/4	0.01	0.02	0.03	0.04	0.06	0.08	0.14	0.28	--	780	3940
18	1	3/4 x 4	0.01	0.01	0.02	0.03	0.04	0.06	0.10	0.20	0.40	1240	6200
18	1	1 x 4	0.01	0.01	0.02	0.03	0.04	0.07	0.11	0.22	0.44	950	4750
18	1	1-1/2 x 1-1/2	0.02	0.02	0.04	0.06	0.08	0.11	0.2	0.38	--	630	3170
18	1	2 x 2	0.04	0.05	0.08	0.11	--	--	--	--	--	450	2290
18	1-1/4	1-1/2 x 1-1/2	0.01	0.01	0.02	0.03	0.04	0.06	0.09	0.19	--	740	4440
18	1-1/2*	1-1/2 x 1-1/2	<.01	<.01	0.01	0.02	0.03	0.04	0.07	0.14	0.28	1420	7100
18	2	2 x 2	<.01	<.01	0.01	0.01	0.02	0.03	0.04	0.09	0.17	1850	9280
24	5/8	1 x 4	0.15	0.19	0.3	0.45	--	--	--	--	--	380	1920
24	3/4	1 x 4	0.06	0.08	0.12	0.18	0.24	0.36	--	--	--	330	2030
24	3/4	1-1/2 x 1-1/2	0.09	0.12	0.18	0.28	0.37	--	--	--	--	250	1500
24	1	3/4 x 3/4	0.04	0.05	0.08	0.12	0.16	0.24	0.41	--	--	440	2220
24	1	3/4 x 4	0.03	0.04	0.06	0.09	0.12	0.18	0.30	--	--	700	3500
24	1	1 x 4	0.04	0.05	0.07	0.11	0.15	0.22	0.37	--	--	530	2670
24	1	1-1/2 x 1-1/2	0.06	0.08	0.12	0.19	0.25	0.37	--	--	--	350	1780
24	1	2 x 2	0.11	0.14	0.21	0.32	--	--	--	--	--	250	1280
24	1-1/4	1-1/2 x 1-1/2	0.03	0.04	0.06	0.09	0.11	0.17	0.29	--	--	440	2660
24	1-1/2*	1-1/2 x 1-1/2	0.02	0.03	0.04	0.06	0.08	0.12	0.21	0.42	--	800	4000
24	2	2 x 2	0.01	0.01	0.02	0.03	0.04	0.06	0.10	0.20	--	1040	5220
30	5/8	1 x 4	0.32	0.41	--	--	--	--	--	--	--	240	1230
30	3/4	1 x 4	0.13	0.17	0.26	0.40	--	--	--	--	--	210	1300
30	3/4	1-1/2 x 1-1/2	0.17	0.23	0.35	--	--	--	--	--	--	160	960
30	1	3/4 x 3/4	0.10	0.13	0.20	0.29	0.39	--	--	--	--	280	1400
30	1	3/4 x 4	0.07	0.10	0.15	0.22	0.30	0.44	--	--	--	440	2200

CLEAR SPAN (in)	DEPTH (in)	MESH (in x in)	50	65	100	150	200	300	500	1000	2000	MAX RECOM. LOAD (psf)	ULTIMATE CAPACITY (psf)
30	1	1 x 4	0.08	0.11	0.17	0.26	0.34	--	--	--	--	340	1710
30	1	1-1/2 x 1-1/2	0.14	0.18	0.27	0.41	--	--	--	--	--	220	1140
30	1	2 x 2	0.24	0.31	0.48	--	--	--	--	--	--	160	820
30	1-1/4	1-1/2 x 1-1/2	0.08	0.10	0.15	0.23	0.30	0.46	--	--	--	280	1700
30	1-1/2*	1-1/2 x 1-1/2	0.05	0.06	0.09	0.14	0.18	0.27	0.46	--	--	510	2560
30	2	2 x 2	0.02	0.03	0.05	0.07	0.09	0.14	0.26	0.45	--	660	3340
36	3/4	1 x 4	0.25	0.33	--	--	--	--	--	--		150	900
36	3/4	1-1/2 x 1-1/2	0.39	--	--	--	--	--	--	--	--	110	660
36	1	3/4 x 3/4	0.20	0.26	0.40	--	--	--	--	--	--	190	990
36	1	3/4 x 4	0.15	0.20	0.31	0.46	--	--	--	--	--	310	1500
36	1	1 x 4	0.16	0.21	0.32	0.49	--	--	--	--	--	230	1180
36	1	1-1/2 x 1-1/2	0.31	0.40	--	--	--	--	--	--	--	150	790
36	1	2 x 2	0.46	--	--	--	--	--	--	--	--	110	570
36	1-1/4	1-1/2 x 1-1/2	0.14	0.18	0.28	0.42	--	--	--	--	--	190	1180
36	1-1/2*	1-1/2 x 1-1/2	0.1	0.13	0.20	0.30	0.40	--	--	--	--	350	1770
36	2	2 x 2	0.04	0.06	0.09	0.13	0.18	0.26	0.44	--	--	460	2320
42	1	3/4 x 3/4	0.37	0.48	--	--	--	--	--	--	--	140	720
42	1	3/4 x 4	0.28	0.37	--	--	--	--	--	--	--	220	1100
42	1	1 x 4	0.33	0.43	--	--	--	--	--	--	--	170	870
42	1	1-1/2 x 1-1/2	0.49	--	--	--	--	--	--	--	--	110	580
42	1-1/4	1-1/2 x 1-1/2	0.26	0.34	--	--	--	--	--	--	--	140	870
42	1-1/2*	1-1/2 x 1-1/2	0.17	0.22	0.34	--	--	--	--	--	--	260	1300
42	2	2 x 2	0.08	0.10	0.16	0.24	0.32	0.47	--	--	--	340	1700
46	1	1 x 4	0.48	--	--	--	--	--	--	--	--	140	720
46	1-1/4	1-1/2 x 1-1/2	0.37	0.49	--	--	--	--	--	--	--	120	720
48	1	3/4 x 4	0.48	--	--	--	--	--	--	--	--	170	800
48	1-1/2*	1-1/2 x 1-1/2	0.28	0.37	--	--	--	--	--	--	--	200	1000
48	2	2 x 2	0.14	0.18	0.28	0.42	--	--	--	--	--	260	1300
54	1-1/2*	1-1/2 x 1-1/2	0.42	--	--	--	--	--	--	--	--	150	790
54	2	2 x 2	0.21	0.27	0.42	--	--	--	--	--	--	200	1030
60	2	2 x 2	0.37	0.47	--	--	--	--	--	--	--	160	830

8. Load Performance - Concentrated Point Load Tables

Deflection in inches for a concentrated point load (lb) at the clear span shown.

CLEAR SPAN (in)	DEPTH (in)	MESH (in x in)	50	100	200	300	500	1000	2000
18	5/8	1 x 4	0.08	0.16	0.32	0.48	--	--	--
18	1	1 x 4	<.01	0.01	0.02	0.03	0.06	0.11	0.22
18	1	1-1/2 x 1-1/2	<.01	0.01	0.03	0.04	0.07	0.14	0.27
18	1	2 x 2	0.04	0.08	0.16	0.24	0.40	--	--
18	1-1/2*	1-1/2 x 1-1/2	<.01	<.01	0.01	0.02	0.03	0.06	0.13

CLEAR SPAN (in)	DEPTH (in)	MESH (in x in)	50	100	200	300	500	1000	2000
18	2	2 x 2	<.01	<.01	0.01	0.02	0.03	0.05	0.1
24	5/8	1 x 4	0.19	0.38	--	--	--	--	--
24	1	1 x 4	0.01	0.02	0.05	0.07	0.12	0.24	0.49
24	1	1-1/2 x 1-1/2	0.01	0.03	0.05	0.08	0.13	0.26	--
24	1	2 x 2	0.1	0.19	0.38	--	--	--	--
24	1-1/4	1-1/2 x 1-1/2	<.01	0.01	0.03	0.04	0.07	--	--
24	1-1/2*	1-1/2 x 1-1/2	<.01	0.01	0.02	0.03	0.06	0.12	0.23
24	2	2 x 2	<.01	<.01	0.01	0.02	0.04	0.07	0.14
30	5/8	1 x 4	0.37	--	--	--	--	--	--
30	1	1 x 4	0.02	0.05	0.09	0.14	0.23	0.45	--
30	1	1-1/2 x 1-1/2	0.03	0.05	0.1	0.15	0.26	--	--
30	1	2 x 2	0.19	0.37	--	--	--	--	--
30	1-1/4	1-1/2 x 1-1/2	0.01	0.03	0.05	0.08	0.13	--	--
30	1-1/2*	1-1/2 x 1-1/2	0.01	0.02	0.04	0.06	0.1	0.2	--
30	2	2 x 2	<.01	0.01	0.02	0.03	0.06	0.12	0.23
36	1	1 x 4	0.04	0.07	0.14	0.21	0.35	--	--
36	1	1-1/2 x 1-1/2	0.03	0.07	0.14	0.2	0.34	--	--
36	1	2 x 2	0.32	--	--	--	--	--	--
36	1-1/4	1-1/2 x 1-1/2	0.02	0.03	0.07	0.10	0.16	--	--
36	1-1/2*	1-1/2 x 1-1/2	0.02	0.03	0.06	0.09	0.15	0.3	--
36	2	2 x 2	<.01	0.01	0.03	0.04	0.07	0.15	0.29
42	1	1 x 4	0.05	0.11	0.21	0.32	--	--	--
42	1	1-1/2 x 1-1/2	0.06	0.12	0.23	0.35	--	--	--
42	1-1/4	1-1/2 x 1-1/2	0.03	0.06	0.11	0.17	0.28	--	--
42	1-1/2*	1-1/2 x 1-1/2	0.02	0.04	0.09	0.13	0.22	0.44	--
42	2	2 x 2	0.01	0.02	0.05	0.08	0.12	0.25	0.5
46	1	1 x 4	0.07	0.13	0.26	0.39	--	--	--
46	1	1-1/2 x 1-1/2	0.07	0.14	0.28	0.42	--	--	--
46	1-1/4	1-1/2 x 1-1/2	0.04	0.07	0.15	0.22	0.37	--	--
48	1-1/2*	1-1/2 x 1-1/2	0.03	0.06	0.12	0.18	0.29	--	--
48	2	2 x 2	0.01	0.03	0.06	0.09	0.15	0.3	--
54	1-1/2*	1-1/2 x 1-1/2	0.04	0.07	0.15	0.22	0.37	--	--
58	1-1/2*	1-1/2 x 1-1/2	0.04	0.08	0.17	0.25	0.42	--	--

9. Load Performance - Concentrated Line Load Tables

Deflection in inches for a concentrated line load (lb/ft of width) at the clear span shown. Maximum Recommended Load and Ultimate Capacity are given per foot of width.

CLEAR SPAN (in)	DEPTH (in)	MESH (in x in)	50	100	200	300	500	1000	2000	MAX RECOM. LOAD (lb/ft)	ULTIMATE CAPACITY (lb/ft)
12	5/8	1 x 4	0.02	0.04	0.09	0.13	--	--	--	770	3860
12	3/4	1 x 4	<.01	.01	0.02	0.04	0.06	0.12	--	670	4060
12	3/4	1-1/2 x 1-1/2	0.01	0.02	0.04	0.06	0.10	--	--	500	3000

CLEAR SPAN (in)	DEPTH (in)	MESH (in x in)	50	100	200	300	500	1000	2000	MAX RECOM. LOAD (lb/ft)	ULTIMATE CAPACITY (lb/ft)
12	1	3/4 x 3/4	<.01	<.01	0.02	0.03	0.05	0.1	0.2	880	4440
12	1	3/4 x 4	<.01	<.01	0.01	0.02	0.03	0.07	0.13	1400	7020
12	1	1 x 4	<.01	0.01	0.02	0.02	0.04	0.08	--	1070	5350
12	1	1-1/2 x 1-1/2	<.01	0.01	0.03	0.04	0.06	0.13	--	710	3560
12	1	2 x 2	0.02	0.03	0.06	0.09	--	--	--	510	2570
12	1-1/4	1-1/2 x 1-1/2	<.01	<.01	0.01	0.02	0.03	0.06	--	110	6660
12	1-1/2*	1-1/2 x 1-1/2	<.01	<.01	0.01	0.02	0.03	0.05	0.11	1600	8000
12	2	2 x 2	<.01	<.01	<.01	0.01	0.02	0.03	0.06	1920	9620
18	5/8	1 x 4	0.06	0.12	0.23	0.35	--	--	--	510	2560
18	3/4	1 x 4	0.02	0.04	0.08	0.12	0.20	--	--	450	2710
18	3/4	1-1/2 x 1-1/2	0.03	0.06	0.13	0.19	0.32	--	--	330	2000
18	1	3/4 x 3/4	0.01	0.03	0.06	0.09	0.15	0.29	--	590	2960
18	1	3/4 x 4	0.01	0.02	0.04	0.06	0.11	0.21	0.43	930	4680
18	1	1 x 4	0.01	0.02	0.05	0.07	0.12	0.23	--	710	3560
18	1	1-1/2 x 1-1/2	0.02	0.04	0.08	0.12	0.2	0.41	--	470	2370
18	1	2 x 2	0.04	0.08	0.16	--	--	--	--	340	1710
18	1-1/4	1-1/2 x 1-1/2	0.01	0.02	0.04	0.06	0.10	--	--	540	3240
18	1-1/2*	1-1/2 x 1-1/2	0.01	0.02	0.03	0.05	0.08	0.15	0.3	1060	5330
18	2	2 x 2	<.01	0.01	0.02	0.03	0.05	0.09	0.18	1390	6960
24	5/8	1 x 4	0.12	0.24	0.48	--	--	--	--	380	1920
24	3/4	1 x 4	0.05	0.09	0.19	0.28	0.47	--	--	330	2030
24	3/4	1-1/2 x 1-1/2	0.07	0.15	0.30					044	
24	--	--	--							250	1500
24	1	3/4 x 3/4	0.03	0.07	0.13	0.2	0.33	--	--	440	2220
24	1	3/4 x 4	0.02	0.05	0.10	0.15	0.24	0.48	--	700	3510
24	1	1 x 4	0.03	0.06	0.12	0.18	0.3	--	--	530	2670
24	1	1-1/2 x 1-1/2	0.05	0.1	0.2	0.3	0.49	--	--	350	1780
24	1	2 x 2	0.09	0.17	--	--	--	--	--	250	1280
24	1-1/4	1-1/2 x 1-1/2	0.02	0.05	0.09	0.14	0.23	--	--	460	2760
24	1-1/2*	1-1/2 x 1-1/2	0.02	0.03	0.07	0.1	0.17	0.33	--	800	4000
24	2	2 x 2	0.01	0.02	0.03	0.05	0.08	0.16	--	1040	5220
30	5/8	1 x 4	0.2	0.41	--	--	--	--	--	300	1530
30	3/4	1 x 4	0.08	0.17	0.34	--	--	--	--	270	1620
30	3/4	1-1/2 x 1-1/2	0.11	0.22	0.45	--	--	--	--	200	1200
30	1	3/4 x 3/4	0.06	0.13	0.25	0.38	--	--	--	350	1770
30	1	3/4 x 4	0.05	0.09	0.19	0.28	0.47	--	--	560	2800
30	1	1 x 4	0.05	0.11	0.22	0.32	--	--	--	420	2140
30	1	1-1/2 x 1-1/2	0.09	0.18	0.35	--	--	--	--	280	1420
30	1	2 x 2	0.15	0.31	--	--	--	--	--	200	1020
30	1-1/4	1-1/2 x 1-1/2	0.05	0.10	0.19	0.29	0.49	--	--	350	2130
30	1-1/2*	1-1/2 x 1-1/2	0.03	0.06	0.12	0.18	0.29	--	--	640	3200
30	2	2 x 2	0.01	0.03	0.06	0.09	0.14	0.29	--	830	4180

CLEAR SPAN (in)	DEPTH (in)	MESH (in x in)	50	100	200	300	500	1000	2000	MAX RECOM. LOAD (lb/ft)	ULTIMATE CAPACITY (lb/ft)
36	5/8	1 x 4	0.32	--	--	--	--	--	--	250	1270
36	3/4	1 x 4	0.13	0.27	--	--	--	--	--	220	1350
36	3/4	1-1/2 x 1-1/2	0.21	0.42	--	--	--	--	--	160	1000
36	1	3/4 x 3/4	0.11	0.21	0.42	--	--	--	--	290	1480
36	1	3/4 x 4	0.08	0.16	0.33	0.49	--	--	--	460	2340
36	1	1 x 4	0.09	0.17	0.34	--	--	--	--	350	1780
36	1	1-1/2 x 1-1/2	0.16	0.33	--	--	--	--	--	230	1180
36	1	2 x 2	0.25	0.49	--	--	--	--	--	170	850
36	1-1/4	1-1/2 x 1-1/2	0.07	0.15	0.30	0.45	--	--	--	290	1770
36	1-1/2*	1-1/2 x 1-1/2	0.05	0.11	0.21	0.32	--	--	--	530	2660
36	2	2 x 2	0.02	0.05	0.09	0.14	0.23	0.47	--	690	3480
42	1	3/4 x 3/4	0.17	0.34	--	--	--	--	--	250	1260
42	1	3/4 x 4	0.13	0.26	--	--	--	--	--	400	2000
42	1	1 x 4	0.15	0.3	--	--	--	--	--	300	1520
42	1	1-1/2 x 1-1/2	0.26	0.45	--	--	--	--	--	200	1010
42	1	2 x 2	0.38	--	--	--	--	--	--	140	730
42	1-1/4	1-1/2 x 1-1/2	0.12	0.24	0.48	--	--	--	--	250	1520
42	1-1/2*	1-1/2 x 1-1/2	0.08	0.16	0.32	0.47	--	--	--	450	2280
42	2	2 x 2	0.04	0.07	0.14	0.22	0.36	--	--	590	2980
46	1	1 x 4	0.20	0.40	--	--	--	--	--	270	1390
46	1	1-1/2 x 1-1/2	0.32	--	--	--	--	--	--	180	900
46	1-1/4	1-1/2 x 1-1/2	0.16	0.31	--	--	--	--	--	230	1390
48	1	3/4 x 3/4	0.25	--	--	--	--	--	--	220	1110
48	1	3/4 x 4	0.19	0.39	--	--	--	--	--	350	1750
48	1-1/2*	1-1/2 x 1-1/2	0.11	0.23	0.45	--	--	--	--	400	2000
48	2	2 x 2	0.06	0.11	0.22	0.33	--	--	--	520	2610
54	1-1/2*	1-1/2 x 1-1/2	0.15	0.3	--	--	--	--	--	350	1770
54	2	2 x 2	0.07	0.15	0.3	0.45	--	--	--	460	2320
60	2	2 x 2	0.12	0.23	0.47	--	--	--	--	410	2090

10. High Load Capacity (HLC) Grating

ZeAllgrate molded HLC grating is engineered to carry forklift and vehicular loads. With a 48% open surface area, it is available in 6′ x 4′ or 4′ x 8′ panels with 1-1/2″ and 2″ depths, smooth or aluminum-oxide grit surface, ASTM E-84 rating 25 or less (Class 1).

Load Type	Wheel Load (lb)	Distribution Perpendicular	Allowable Span 1-1/2″ HLC	Allowable Span 2″ HLC
AASHTO Standard Truck	20,800	8″	1′ - 2″	1′ - 5″
Automobile Traffic	2,200	8″	2′ - 2″	2′ - 8″
5-Ton Capacity Lift Truck	13,480	11″	1′ - 1″	1′ - 5″
3-Ton Capacity Lift Truck	8,730	7″	1′ - 0″	1′ - 4″

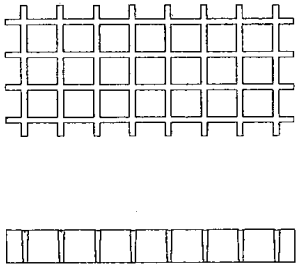

Molded HLC grating - 1″ x 2″ rectangular mesh

11. Stair Solutions

ZeAllgrate provides slip and corrosion resistant one-piece molded stair treads engineered to exceed OSHA and model building code standards. Covered stair treads and tread covers are available for replacing deteriorating concrete steps or upgrading existing metal, concrete and wood steps.

Load (lb)	Span (in)	18	24	30	36	42	48
Span/150		0.12	0.16	0.20	0.24	0.28	0.32
250		0.03	0.05	0.09	0.16	0.25	0.41
500		0.06	0.10	0.19	0.32	0.50	--

12. Floor Plate

ZeAllgrate solid floor plate is a non-porous solid composite panel with bidirectional strength and corrosion resistance, available in 1/8″, 1/4″, 3/8″, 1/2″ and 3/4″ thicknesses. Standard panel sizes 3′ x 10′, 4′ x 8′, 4′ x 12′ and 5′ x 12′.

Plate Thickness	Weight (psf)	Panel Sizes
1/8″	1.3	3′ x 10′, 4′ x 8′, 4′ x 12′, 5′ x 12′
1/4″	2.6	3′ x 10′, 4′ x 8′, 4′ x 12′, 5′ x 12′
3/8″	3.9	3′ x 10′, 4′ x 8′, 4′ x 12′, 5′ x 12′
1/2″	5.2	3′ x 10′, 4′ x 8′, 4′ x 12′, 5′ x 12′
3/4″	7.8	3′ x 10′, 4′ x 8′, 4′ x 12′, 5′ x 12′

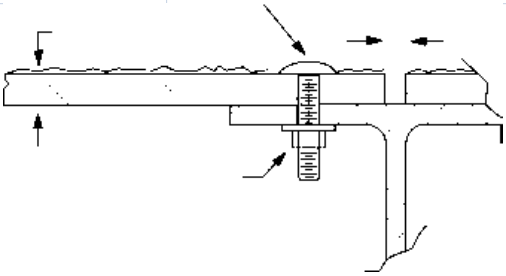

ZeAllgrate solid floor plate

13. Accessories & Complementary Products

ZeAllgrate offers epoxy clear coating in a spray can for protecting exposed ends of cut panels (one can covers approximately 100 linear feet). Bonding kits are available in natural, unpigmented color. Specially designed pedestals for square mesh molded grating provide safe support for elevated flooring, adjustable from 3-1/4″ to 72″ heights. Type M Hold-Down Clips secure panels to structural supports; ZeAllgrate provides 8 hold-down clips per panel for covered grating installations.

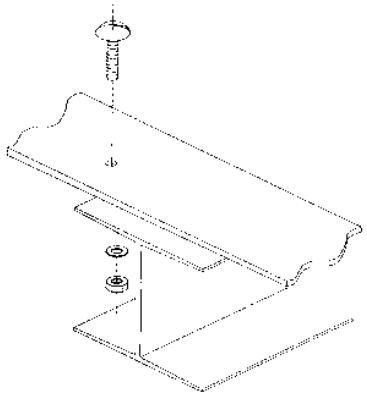

Hold-down clips and mounting accessories

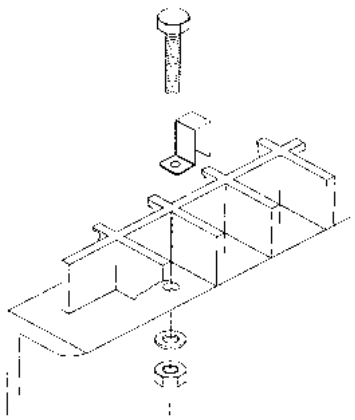

Grating clip assembly

14. Chemical Resistance Guide

C - Continuous exposure of the grating to the chemical at the listed temperature. S - Frequent exposure to splashes and spills. I - Infrequent exposure, spill immediately cleaned up. N - Not recommended at the listed concentration and temperature. Consult factory for concentrations, temperatures or chemicals not listed.

Chemical Environment	% Concentration	Temp ■F	ZeAllgrate Molded	None	None	None	ZeAllgrate Pultruded	None
None	None	None	ZeAllgrate Vinyl Ester	ZeAllgrate Isophthalic	ZeAllgrate Food-Grade ISO	XFR	VEFR	ISOFR
Acetic Acid	50	MAX	C C C I	None	None	None	C C	None
Acetone	100	75	S	I	I	I	I	N
Alcohols	100	120	C I I S	None	None	None	I I	None
Alum	ALL	MAX	C	C	C	C	C	C
Aluminum Chloride	ALL	MAX	C C C C	None	None	None	C C	None
Aluminum Fluoride	20	75	C	I	I	I	I	I
Ammonium Hydroxide	30	75	C N N N	None	None	None	I N	None
Ammonium Salts-Neutral	ALL	120	C	C	C	S	C	S
Ammonium Salts-Aggressive	ALL	75	S I I I	None	None	None	T N	None
Aromatic Solvents	ALL	75	T	N	N	N	N	N
Barium Salts	ALL	MAX	C C C C	None	None	None	C C	None
Benzene	100	140	I	I	I	I	I	N
Black Liquor (Pulp Mill)	ALL	MAX	C I I I	None	None	None	I N	None
Bleach Liquor (Pulp Mill)	ALL	MAX	C	I	I	N	I	N
Calcium Hydroxide	25	MAX	C S S I	None	None	None	S I	None
Calcium Hypochlorite	ALL	MAX	C	I	I	I	I	N
Calcium Salts	ALL	MAX	C C C C	None	None	None	C C	None
Carbon Tetrachloride	100	75	C	I	I	S	S	N
Chlorinated Hydrocarbons	100	75	T T T N	None	None	None	T T	None
Chlorine Dioxide	SAT	140	C	N	N	N	S	N
Chlorine Water	SAT	120	C I I I	None	None	None	I N	None
Chlorine, Wet	SAT	MAX	C	N	N	N	N	N
Chlorobenzene	100	75	S N N N	None	None	None	N N	None
Chlorobenzene	ALL	Up to 100	C	N	N	N	N	N
Chloroform	100	75	N N N N	None	None	None	N N	None

Chemical Environment	% Concentration	Temp ■F	ZeAllgrate Molded	None	None	None	ZeAllgrate Pultruded	None
Chromic Acid	50	140	S	S	S	N	I	N
Citric Acid	ALL	MAX	C C C C	None	None	None	C C	None
Copper Cyanide Plating	ALL	125	C	S	S	N	S	I
Copper Salts	ALL	MAX	C C C C	None	None	None	C C	None
Crude Oil (Sweet or Sour)	ALL	MAX	C	C	C	C	C	C
Dichlorobenzene	100	75	T N N N	None	None	None	N N	None
Ethers		75	T	N	N	N	N	N
Ferric Chloride	100	MAX	C C C C	None	None	None	C C	None
Ferric Salts	ALL	MAX	C	C	C	C	C	C
Fluoride Salts+HCl	ALL	75	C S S I	None	None	None	I N	None
Fluosilicic Acid	10	75	C	S	S	S	S	I
Formaldehyde	37	150	C I I I	None	None	None	S I	None
Formic Acid	25	100	C	S	S	I	S	I
Fuel (Diesel, Jet, Gasoline)	ALL	100	C C C C	None	None	None	C C	None
Glycerine	100	MAX	C	C	C	C	C	C
Green Liquor (Pulp Mill)	ALL	MAX	C N N N	None	None	None	I N	None
Hydrobromic Acid	48	MAX	S	S	S	I	I	N
Hydrochloric Acid	10	MAX	C S S C	None	None	None	S S	None
Hydrochloric Acid	30	MAX	C	S	S	I	I	I
Hydrochloric Acid (concentrated)	ALL	Up to 180	I N N N	None	None	None	N N	None
Hydrocyanic Acid	ALL	MAX	C	I	I	I	S	I
Hydrofluoric Acid	20	75	S N N N	None	None	None	N N	None
Hydrogen Peroxide	30	75	C	N	N	I	S	N
Lactic Acid	100	MAX	C C C C	None	None	None	C C	None
Lime Slurry	SAT	MAX	C	C	C	C	C	C
Lithium Chloride	SAT	MAX	N N N N	None	None	None	N N	None
Lithium Salts	ALL	MAX	C	C	C	C	T	T
Magnesium Salts	ALL	MAX	C C C C	None	None	None	C C	None
Maleic Acid	100	MAX	C	S	S	C	S	I
Mercury Chloride	100	MAX	C C C C	None	None	None	C C	None
Nickel Salts	ALL	MAX	C	C	C	C	C	C
Nitric Acid	20	120	C S S I	None	None	None	I I	None
Nitric Acid	35	100	C	N	N	I	I	N
Nitric Acid	40	Ambient	I N N N	None	None	None	N N	None
Nitric, Hydrofluoric	20:2	75	I	N	N	N	N	N
Nitrous Acid	10	75	C C C C	None	None	None	C C	None
Ozone for Sewage Treatment		100	C	C	C	C	C	C
Perchloroethylene	100	75	S N N I	None	None	None	I N	None
Phenol	10	75	C	N	N	N	I	N
Phenol	88	Ambient	S N N N	None	None	None	N N	None
Phosphoric Acid	85	MAX	C	C	C	C	C	S
Phosphoric Acid, Super	115	MAX	C I I S	None	None	None	S N	None
Potassium Hydroxide	10	120	C	I	I	N	S	N
Potassium Salts	ALL	MAX	C C C C	None	None	None	C C	None
Silver Nitrate	100	MAX	C	C	C	C	C	C
Sodium Cyanide	ALL	75	C I I I	None	None	None	S I	None
Sodium Hydroxide	50	MAX	C	I	I	N	I	N
Sodium Hydroxide	10	MAX	C N N N	None	None	None	N N	None

Chemical Environment	% Concentration	Temp ■F	ZeAllgrate Molded	None	None	None	ZeAllgrate Pultruded	None
Sodium Hypochlorite (Stable)	10	100	C	S	S	S	S	I
Sodium Salts-Neutral	ALL	MAX	C C C C	None	None	None	C C	None
Sodium Salts-Aggressive	ALL	75	S	I	I	I	T	N
Sulfur Dioxide	SAT	MAX	C S S S	None	None	None	S S	None
Sulfuric Acid	25	MAX	C	S	S	S	S	I
Sulfuric Acid	50	MAX	C S S S	None	None	None	S N	None
Sulfuric Acid	75	100	C	I	I	I	I	N
Toluene	100	120	S I I N	None	None	None	I N	None
Trichloroethane1,1,1	ALL	75	S	I	I	I	I	N
Trisodium Phosphate	50	MAX	C I I I	None	None	None	I N	None
Water (Fresh, Salt, Moderate D.I.)	100	MAX	C	C	C	C	C	C
Wet Chlorine/Hydrochloric Acid	10-20	Up to 350	S N N N	None	None	None	N N	None
White Liquor (Pulp Mill)	ALL	MAX	C	I	I	I	S	N
Zinc Chloride Plating	ALL	75	C S S S	None	None	None	S N	None
Zinc Salts	100	MAX	C	C	C	C	C	C

15. Engineering Support & Contact

Our technical and sales team supports projects from selection through installation. We provide load tables, chemical resistance data, drawings and on-site support for major projects.

Service	Contact
Product selection & specification	sales@izeall.com
Engineering & load data	engineering@izeall.com
Quotations & pricing	sales@izeall.com
Order status & logistics	sales@izeall.com
After-sales & technical support	support@izeall.com

ZeAllgrate - Nantong ZeAll New Materials Co., Ltd.
No.888 Changtai Road, Nantong, Jiangsu, China 226000
Tel: +86-513-6681-9918 | Email: sales@izeall.com | Web: www.izeall.com

Our sales and engineering team responds to all inquiries within 30 minutes on business days (Monday to Friday, 8:30 - 17:30 China Standard Time). For urgent offshore or OEM projects, contact our export team directly by phone.